Unit V : Logic Families (06 Hours)

- Classification of logic families:
  - Unipolar and Bipolar Logic Families, Characteristics of Digital ICs: Fan-in, Fan-out, Current and voltage parameters, Noise immunity, Propagation Delay, Power Dissipation, Figure of Merits, Operating Temperature Range, power supply requirements.
- Transistor-Transistor Logic
- CMOS
- Comparison between TTL and CMOS

Logic Families

A group of Compatible ICs with the same Logic Levels , using same supply voltages for performing various logic functions, and have been fabricated using specific circuit configuration is referred to as a Logic Family

Logic Families are classified as

- Bipolar - fabricated using bipolar devices such as a B.J.Transistors

  These can be further classified as

1. Saturated - Ex. **TTL (Transistor Transistor Logic)** , RTL , DTL,
2. Nonsaturated - Ex. **Schottky TTL** , ECL (Emitter coupled Logic)

- Uni polar - fabricated using unipolar devices such as MOSFETs

  Can be further divided as

a. PMOS
b. NMOS
c. **CMOS**

Classification of logic families:

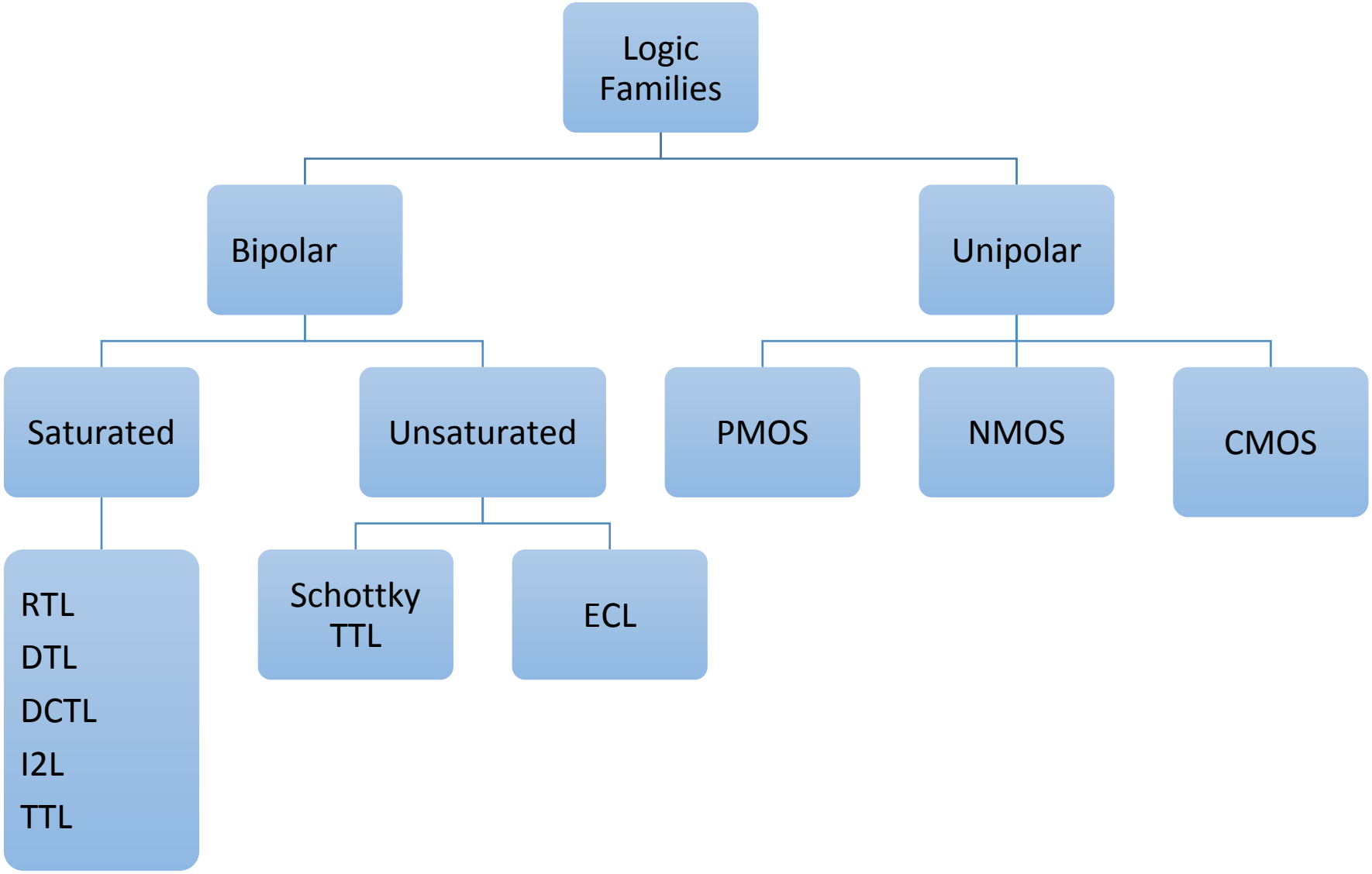

Types of Logic System:

- **Positive Logic System : -**
  - HIGH = 1(+5V)
  - LOW = 0 (0V)

- **Negative Logic System :-**
  - HIGH = 0(+5V)
  - LOW = 1 (0V)

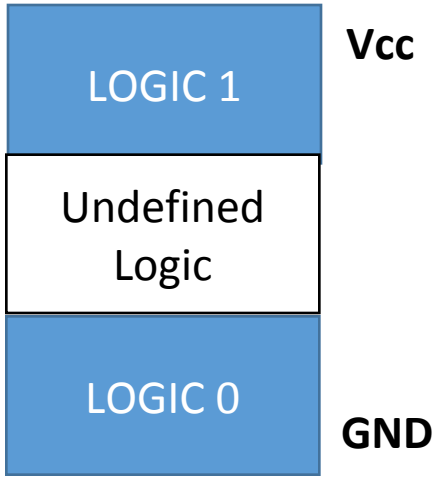

Voltage range for Positive Logic System

Characteristics of Digital ICs :

- Fan-in, Fan-out
- Current and voltage parameters
- Noise immunity
- Propagation Delay
- Power Dissipation
- Figure of Merits
- Operating Temperature Range
- Power supply requirements.

Fan-In & Fan-Out:

Fan-In :

- Fan-In of digital logic gate refers to number of inputs.
- Two input gate will have a fan in equal to 2.

Fan-Out :

- It is defined as Number of similar gates that can be driven by a gate
- Fan-out is a measure of the number of loads that a gate can drive.
- High fan out is advantageous because it reduces the need of additional drivers to drive more gates.

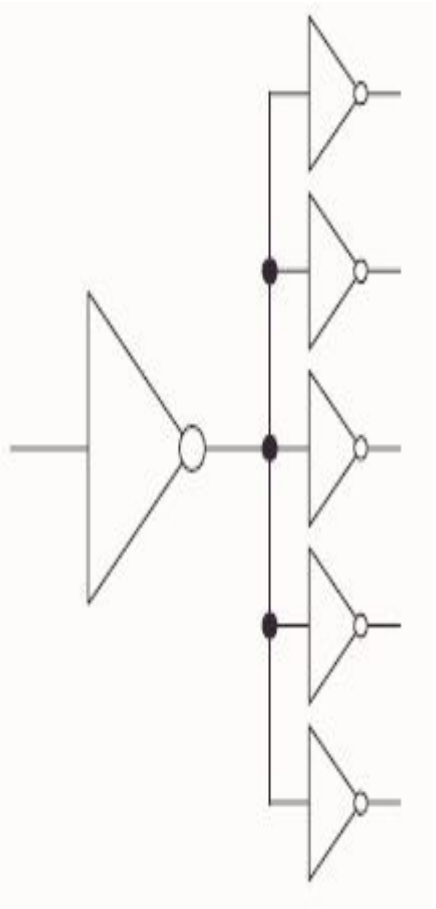

Voltage and Currents Parameters:

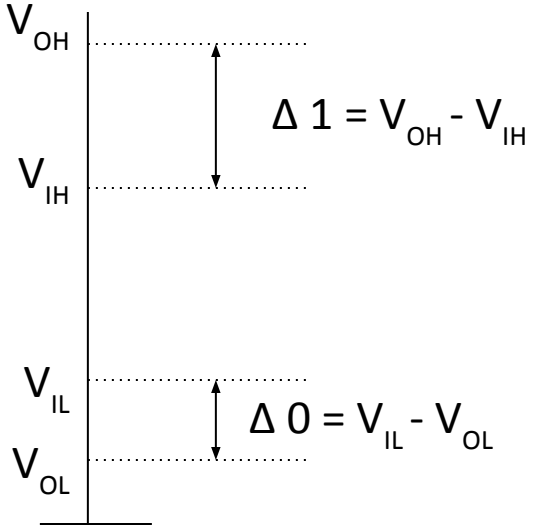

- Ideally the input voltage levels of 0V & 5V (for TTL) are called as logic 0 & 1 levels respectively but practically we won't always obtain volt.

Four Voltage Parameters

1. V_{IH} - High Level input Voltage - It's the minimum input voltage that is recognized by gate as a Logic 1
2. V_{IL} - Low Level input Voltage - It's the maximur input voltage that is recognized by gate as a Logic 0
3. V_{OH} - High Level output Voltage - It's the minimum output voltage that is available at the output of a gate as a Logic 1
4. V_{OL} - Low Level output Voltage - It's the maximum output voltage that is available at the output of a gate as a Logic 0

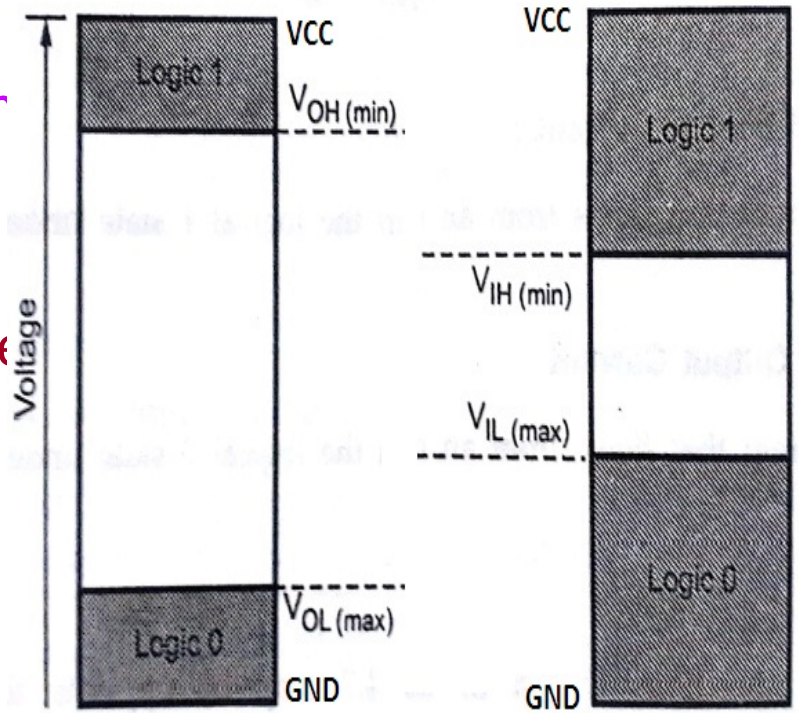

Voltage and Currents Parameters:

Current Parameters

1. I_{IH} - High Level input Current - minimum current that must be supplied by a driving source corresponding to Logic 1 voltage

2. I_{IL} - Low Level input Current - minimum current that must be supplied by a driving source corresponding to Logic 0 voltage
3. I_{OH} - High Level output Current - maximum current a gate can sink in Logic Level 1

4. I_{OL} - Low Level out put Current - maximum current a gate can sink in Logic Level 1

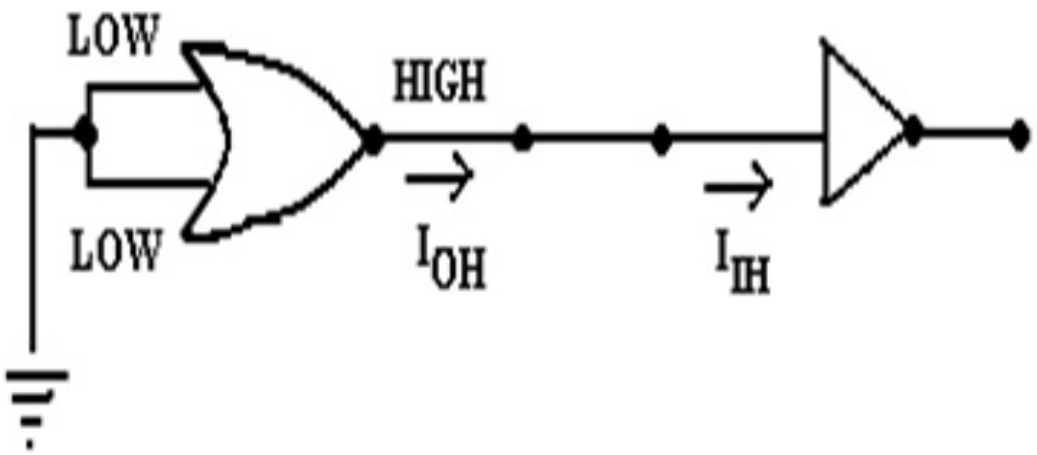

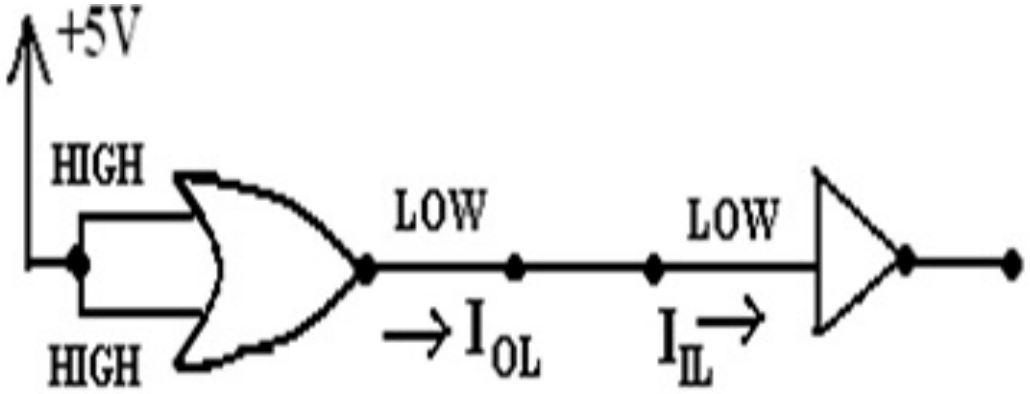

Propagation Delay

- **Propagation Delay** of gate is basically time interval between application of input pulse and the occurrence of output pulse.

- **tPHL** : - Propagation delay measured when o/p switches from High(1) to low(0).
- **tPLH : -** Propagation delay measured when o/p switches from Low(0) to High(1).

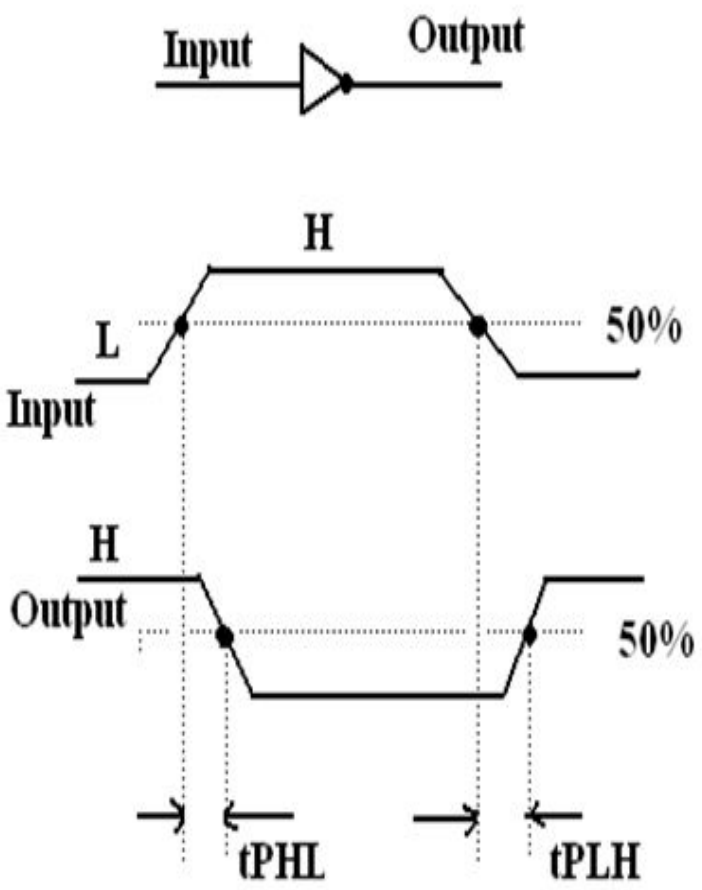

Noise immunity (Noise Margin):

Noise immunity is defined as the ability of a logic circuit to tolerate the noise without causing any unwanted changes in the output.

A quantitative measure of noise immunity is called as **noise margin.**

High level noise margin,

VNH = VOH(min) – VIH(min)

$\Delta 1 = V_{OH} - V_{IH}$

Low level noise margin,

VNL = VIL(max) – VOL(max)

$\Delta 0 = V_{IL} - V_{OL}$

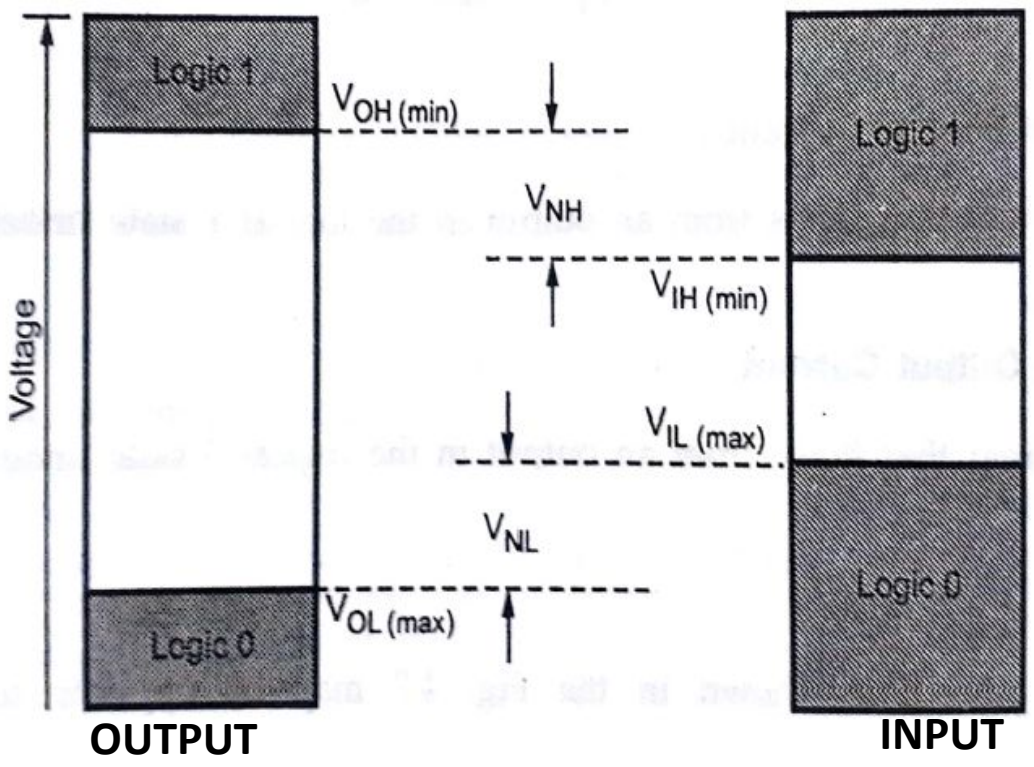

Power Dissipation:

- Power Dissipation is the amount of power dissipated in the circuit

And is given by

$$Pd = Vcc \times Icc \quad \text{where} \quad Icc \text{ - average of } Icc(0) \,\&\, Icc(1)$$

$$Vcc \text{ - Supply voltage}$$

- Power dissipation is specified in milli volts . Low value is desirable

Figure of merit:

- It is defined as the product of Speed & Power dissipation
- **Figure of merit (pJ) = Propagation delay (ns) X Power dissipation (mw)**
- It's also called as Speed Power Product . Low value is desirable

Operating Temperature Range

Accepted Temp Range : 0^0 C to $+70^0$ C for Consumer Eg. - ICs - 74XX Series

: -55^0 C to $+125^0$ C for Military purposes - 54XX series

Power Supply Requirements

Low power requirement - preferred for Battery Operated Equipments

Transistor-Transistor Logic:

- Transistor-Transistor Logic is

named for its dependence on Transistors alone to perform Logic operation.

Two Types of Transistors:

1)N-P-N Transistor

2) P-N-P Transistor

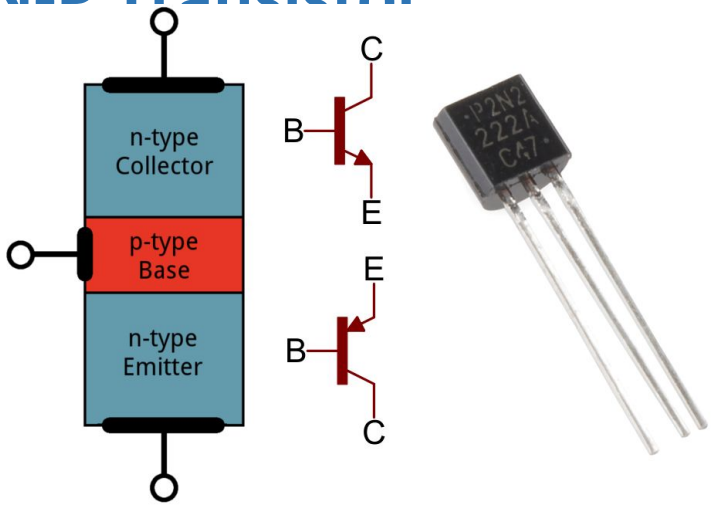

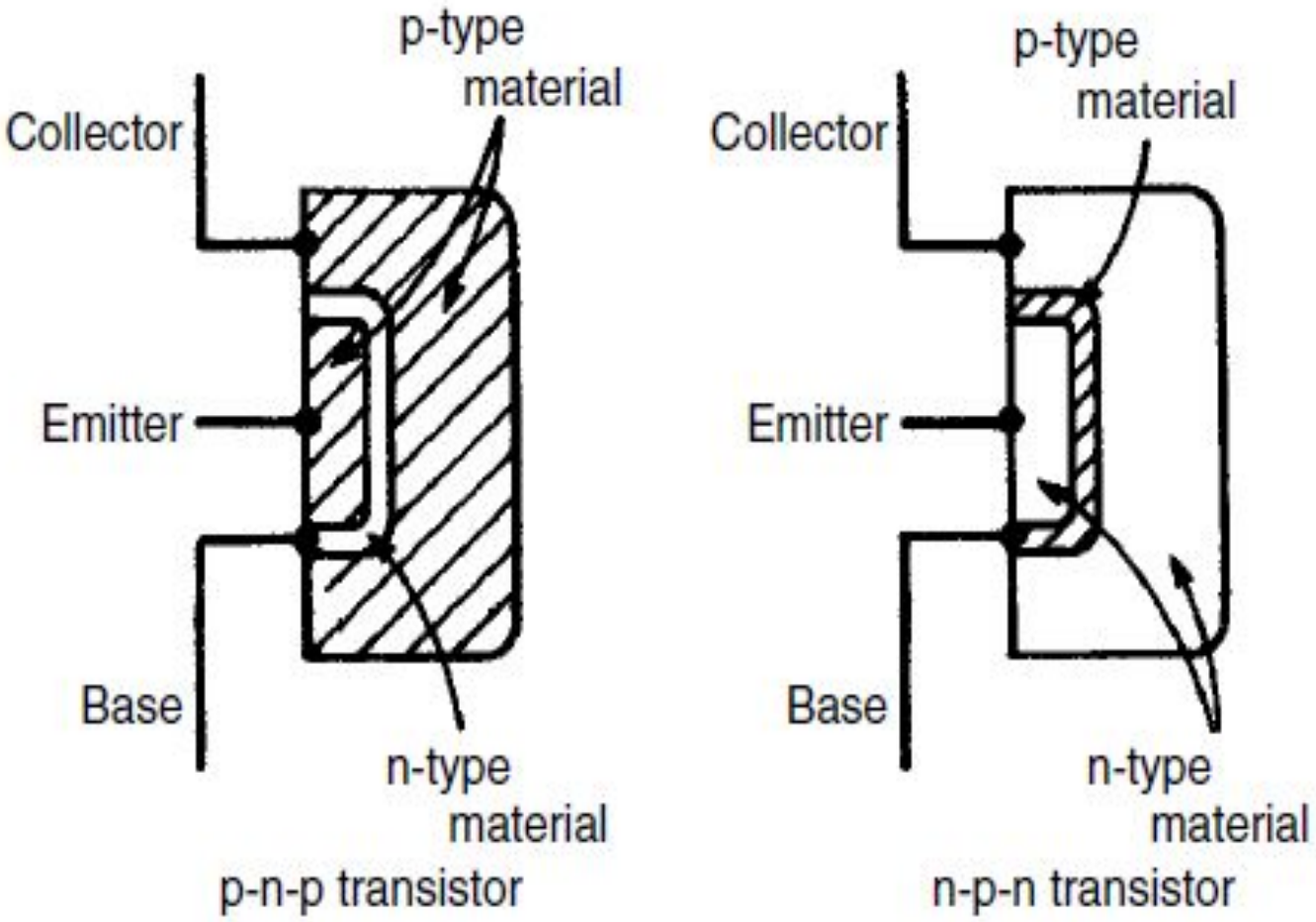

CMOS Inverter:

A complementary MOSFET (CMOS) is obtained by connecting a p-channel & an n-channel MOSFET in series. Drains are tied together & the Output is taken at the Common Drain. Input is applied at the common Gate formed by connecting 2 Gates together as shown

Vi	Q1	Q2	output
0V(logic 0)	OFF	ON	VDD(logic 1)
VDD(logic 1)	ON	OFF	0V (logic 0)

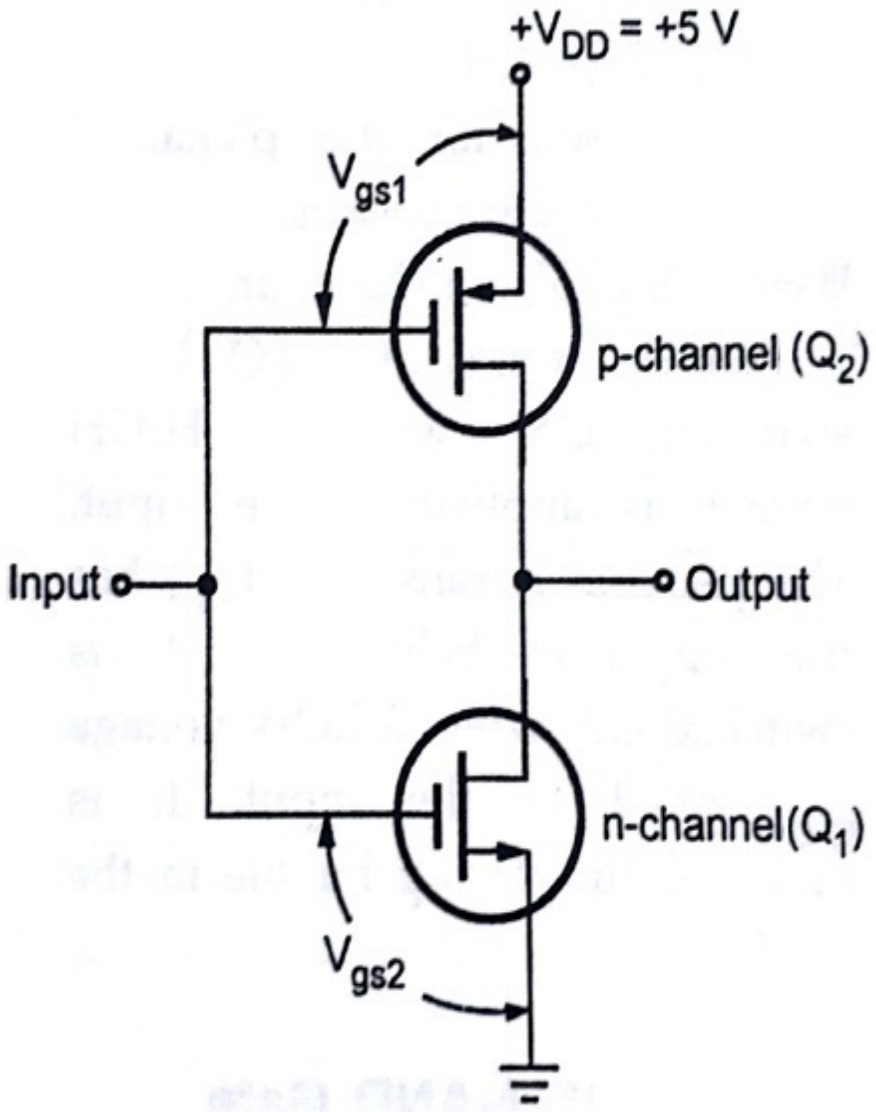

CMOS inverter circuit

Comparison CMOS & TTL:

Characteristics	CMOS	TTL
Voltage Levels	Wide range of voltage levels	Fixed voltage levels (typically 5V)
Power Consumption	Low	High
Technology	MOSFET	Bipolar Junction Transistor (BJT)
Noise Immunity	High	Low
Fan-Out Capability	High fan-out capability	Lower fan-out capability
Speed	Slow propagation delays	Fast propagation delays
Power Supply	Typically operates at 5V or 3.3V	Typically operates at 5V
Applications	Battery-operated devices, high-density ICs	High-speed applications, memory systems